RECTANGLE

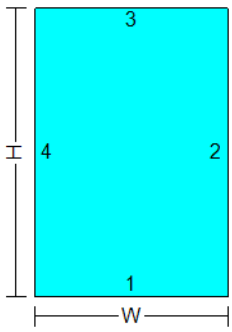


```
W > 0
H > 0
```

SHAPE 1

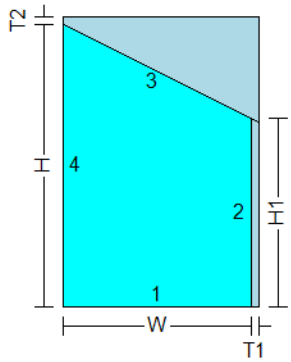


```
H1 < H
H1 > 0
W > 0
H > 0
```

SHAPE 2

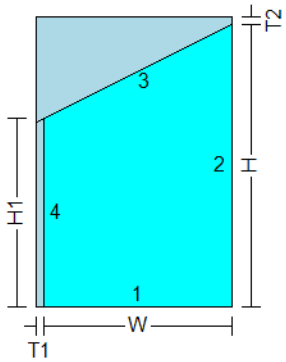


```
H1 < H
H1 > 0
W > 0
H > 0
```

SHAPE 3

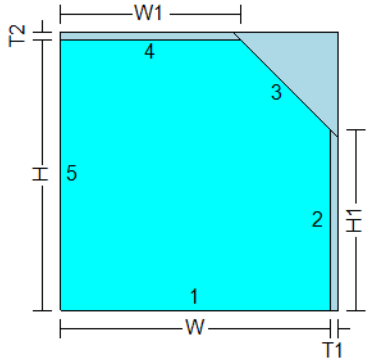


```
H1 < H
W1 < W
H1 > 0
W1 > 0
W > 0
H > 0
```

SHAPE 4

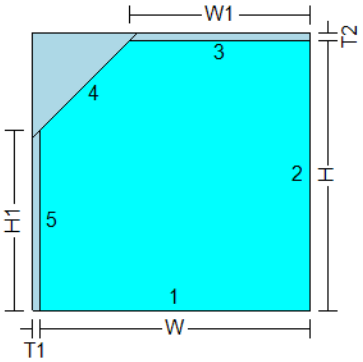


```
H1 < H
W1 < W
H1 > 0
W1 > 0
W > 0
H > 0
```

SHAPE 5

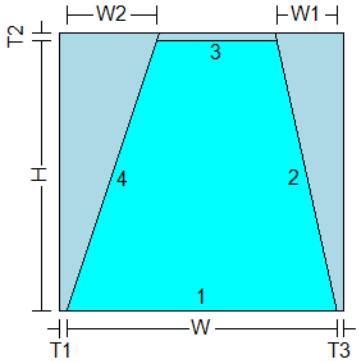


```
W1 > 0
W2 > 0
W > W1 + W2
W > 0
H > 0
```

SHAPE 6

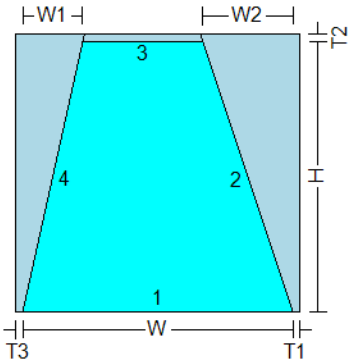


```
W1 > 0
W2 > 0
W > W1 + W2
W > 0
H > 0
```

SHAPE 7

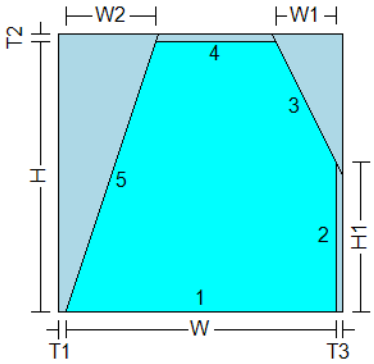


```
H1 < H
H1 > 0
W1 > 0
W2 > 0
W > W1 + W2
W > 0
H > 0
```

SHAPE 8

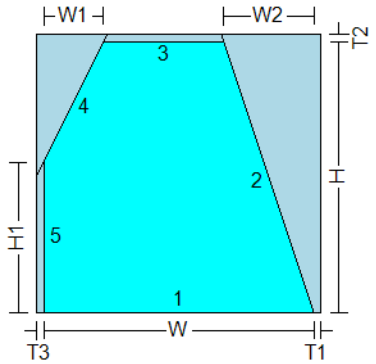


```
H1 < H
H1 > 0
W1 > 0
W2 > 0
W > W1 + W2
W > 0
H > 0
```

SHAPE 9

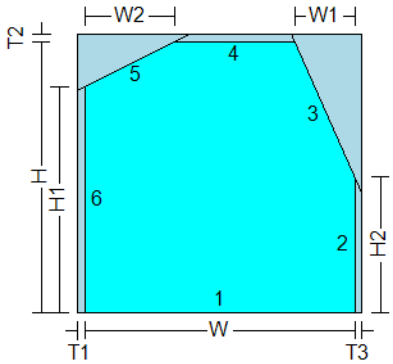


```
H1 < H
H2 < H
H1 > 0
H2 > 0
W1 > 0
W2 > 0
W > W1 + W2
W > 0
H > 0
```

SHAPE 10

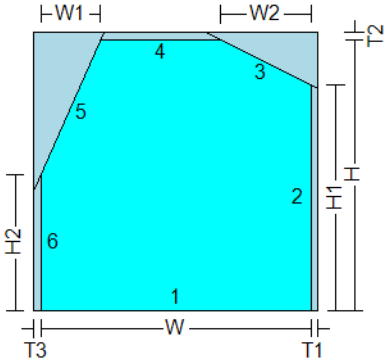


```
H1 < H
H2 < H
H1 > 0
H2 > 0
W1 > 0
W2 > 0
W > W1 + W2
W > 0
H > 0
```

SHAPE 11

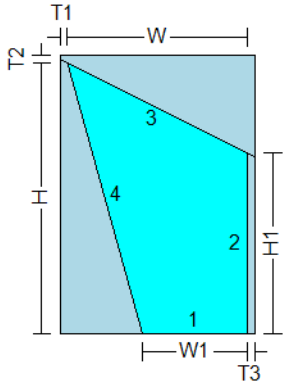


```
H1 > 0
W1 > 0
H1 < H
W1 < W
W > 0
H > 0
```

SHAPE 12

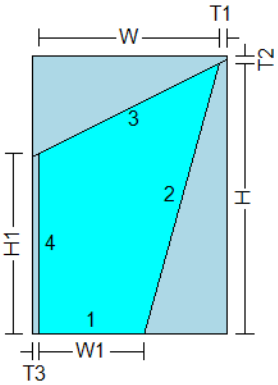


```
H1 > 0
W1 > 0
H1 < H
W1 < W
W > 0
H > 0
```

SHAPE 13

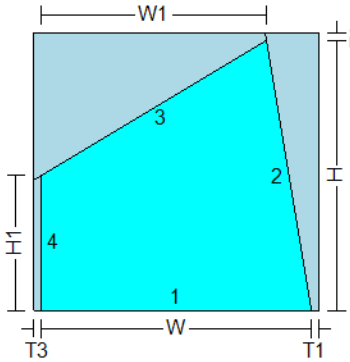


```
H1 > 0
W1 > 0
H1 < H
W1 < W
W > 0
H > 0
```

SHAPE 14

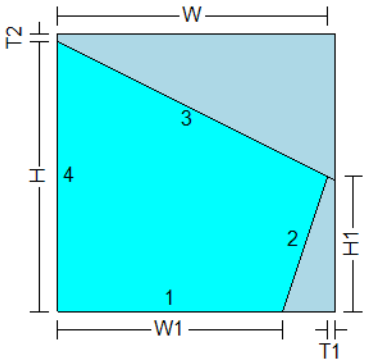


```
H1 > 0
W1 > 0
H1 < H
W1 < W
W > 0
H > 0
```

SHAPE 15

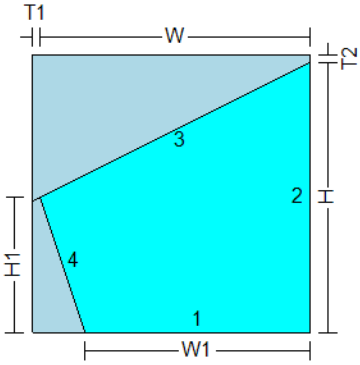


```
H1 > 0
W1 > 0
H1 < H
W1 < W
W > 0
H > 0
```

SHAPE 16

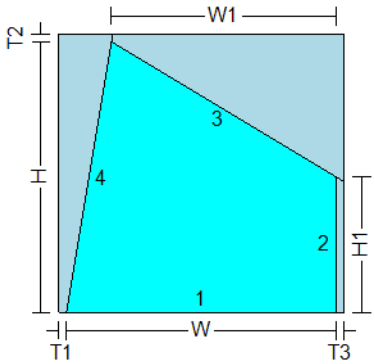


```
H1 > 0
W1 > 0
H1 < H
W1 < W
W > 0
H > 0
```

SHAPE 17

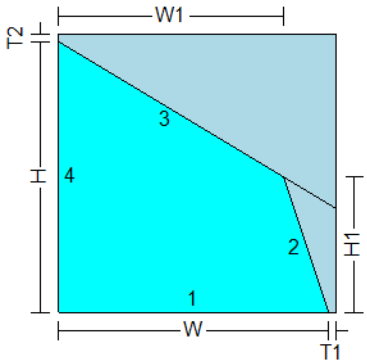


```
H1 > 0
W1 > 0
H1 < H
W1 < W
W > 0
H > 0
```

SHAPE 18

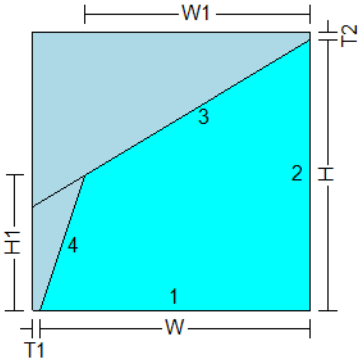


```
H1 > 0
W1 > 0
H1 < H
W1 < W
W > 0
H > 0
```

SHAPE 19

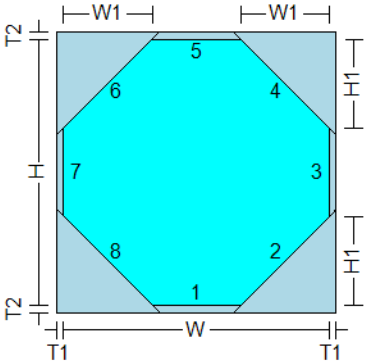


```
H1 > 0
H1 < H/2
W1 > 0
W1 < W/2
W > 0
H > 0
```

SHAPE 20

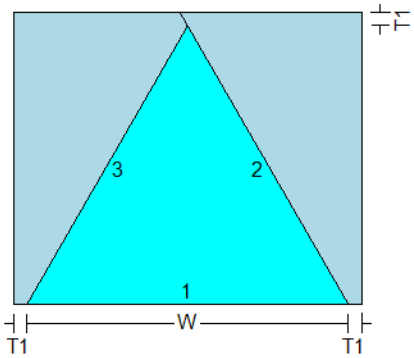


```
W > 0
```

SHAPE 21

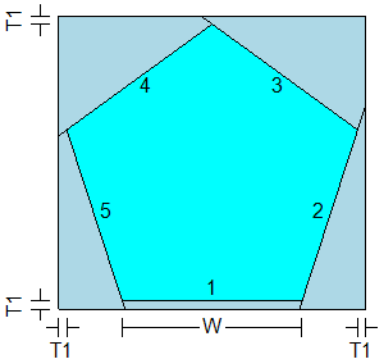


```
W > 0
```

SHAPE 22

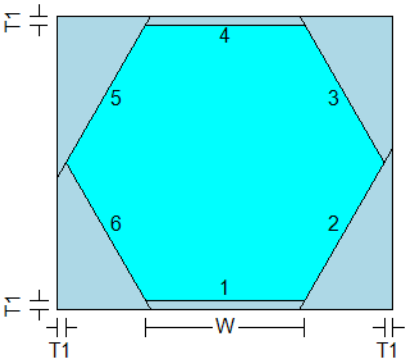


```
W > 0
```

SHAPE 24

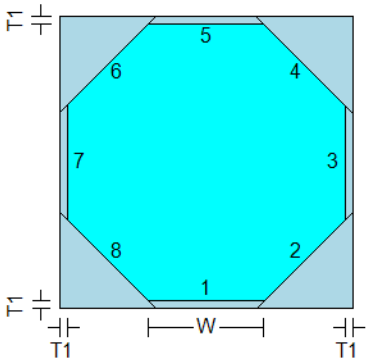


```
W > 0
```

SHAPE 25

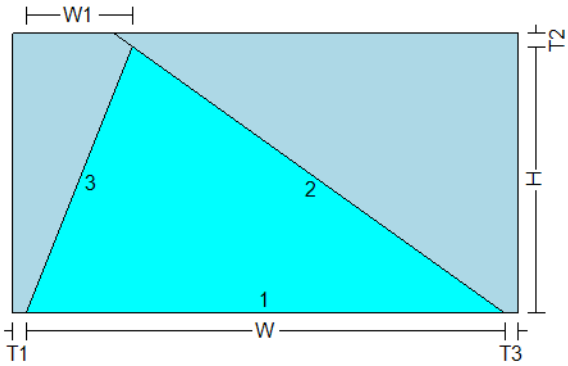


```
W1 > 0
W1 < W
W > 0
H > 0
```

SHAPE 26

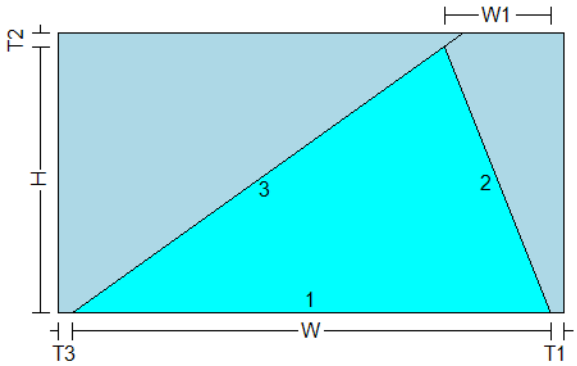


```
W1 > 0
W1 < W
W > 0
H > 0
```

SHAPE 29

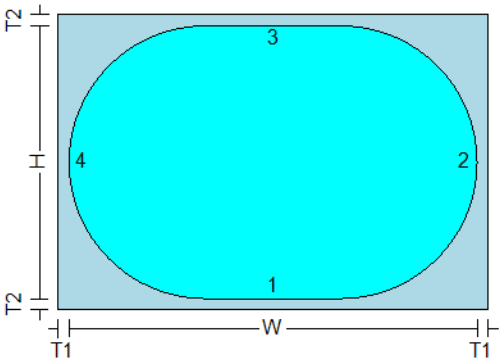


```
W > H
W > 0
H > 0
```

SHAPE 37

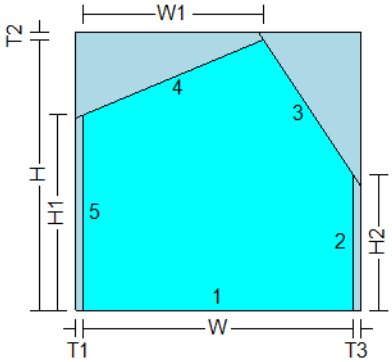


```
H1 < H
H2 < H
H1 > 0
H2 > 0
W1 > 0
W1 < W
W > 0
H > 0
```

SHAPE 38

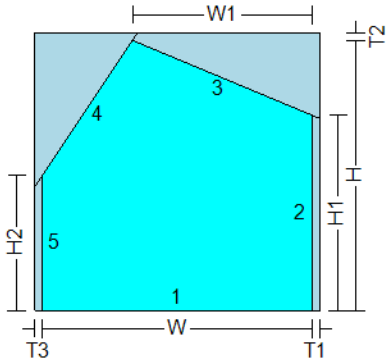


```
H1 < H
H2 < H
H1 > 0
H2 > 0
W1 > 0
W1 < W
W > 0
H > 0
```

SHAPE 39

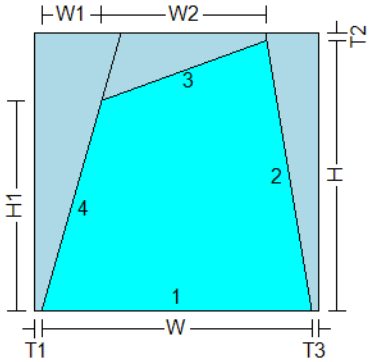


```
H1 > 0
W1 > 0
W2 > 0
H1 < H
W > W1 + W2
W > 0
H > 0
```

SHAPE 40

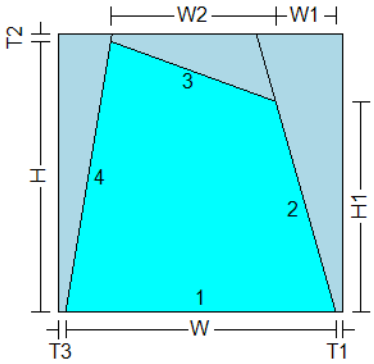


```
H1 > 0
W1 > 0
W2 > 0
H1 < H
W > W1 + W2
W > 0
H > 0
```

SHAPE 41

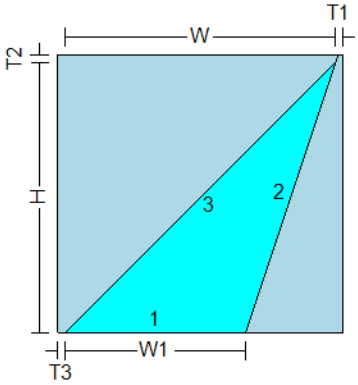


```
W1 > 0
W1 < W
W > 0
H > 0
```

SHAPE 42

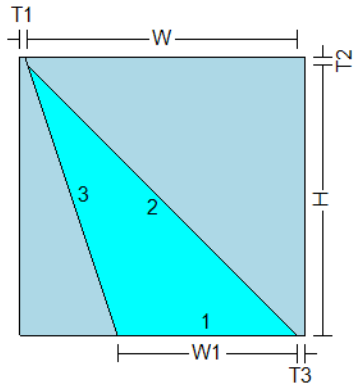


```
W1 > 0
W1 < W
W > 0
H > 0
```

SHAPE 43

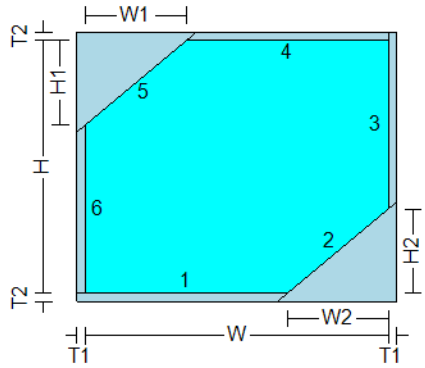


```
H1 < H
H2 < H
H1 > 0
H2 > 0
W1 > 0
W1 < W
W2 > 0
W2 < W
W > 0
H > 0
```

SHAPE 44

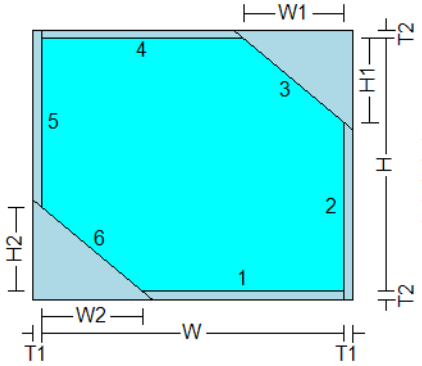


```
H1 < H
H2 < H
H1 > 0
H2 > 0
W1 > 0
W1 < W
W2 > 0
W2 < W
W > 0
H > 0
```

SHAPE 45

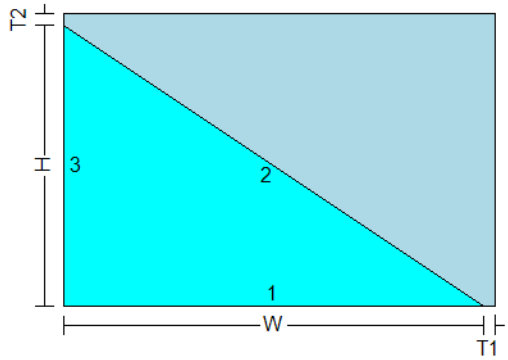


```
W > 0
H > 0
```

SHAPE 46

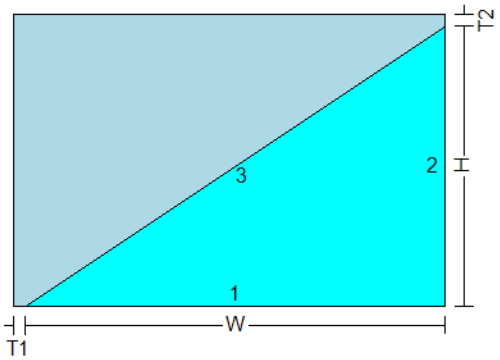


```
W > 0
H > 0
```

SHAPE 47

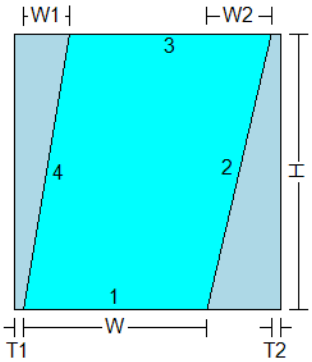


```
W1 >= 0
W2 >= 0
W1 < W + W2
H > 0
```

SHAPE 48

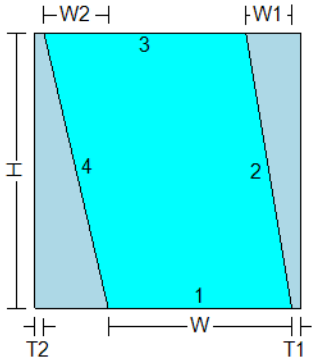


```
W1 >= 0
W2 >= 0
W1 < W + W2
H > 0
```

SHAPE 51

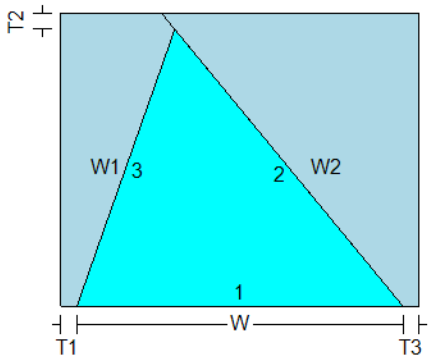


```
W < W1 + W2
W1 < W + W2
W2 < W + W1
W1 > 0
W2 > 0
W > 0
```

SHAPE 53

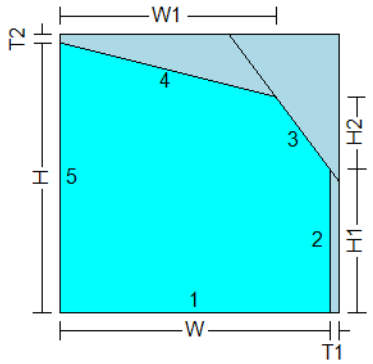


```
H1 > 0
H2 > 0
H > H1 + H2
W1 > 0
W1 < W
W > 0
H > 0
```

SHAPE 54

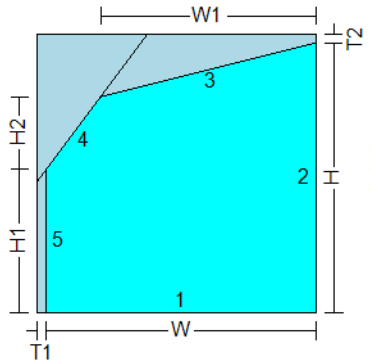


```
H1 > 0
H2 > 0
H > H1 + H2
W1 > 0
W1 < W
W > 0
H > 0
```

SHAPE 55

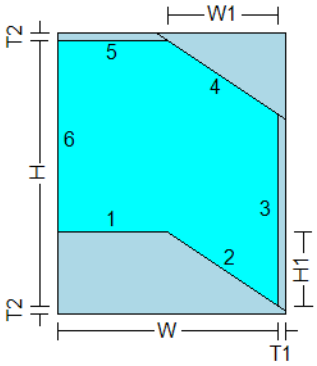


```
W1 > 0
W1 < W
H1 > 0
H1 < H
W > 0
H > 0
```

SHAPE 56

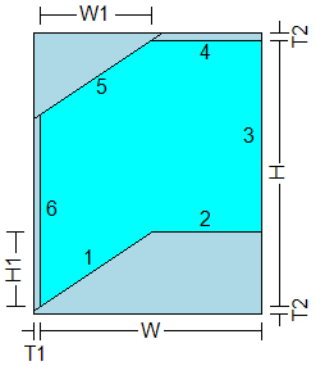


```
W1 > 0
W1 < W
H1 > 0
H1 < H
W > 0
H > 0
```

SHAPE 57

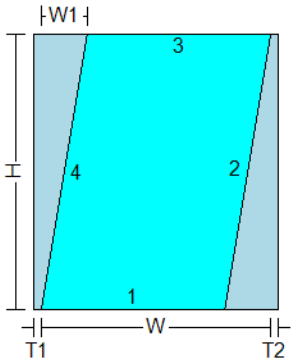


```
W1 >= 0
W1 < W
W > 0
H > 0
```

SHAPE 58

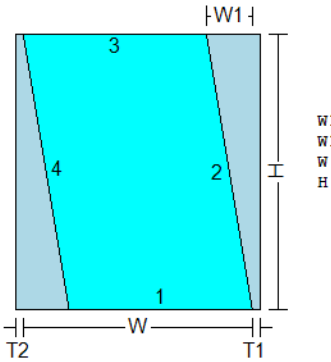


```
W1 >= 0
W1 < W
W > 0
H > 0
```

SHAPE 60

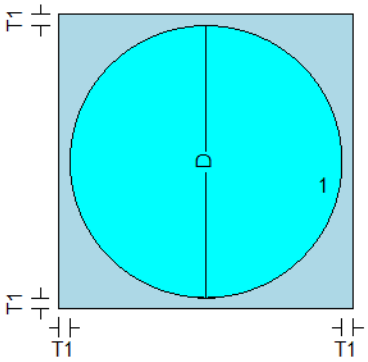


```
D > 0
```

SHAPE 61

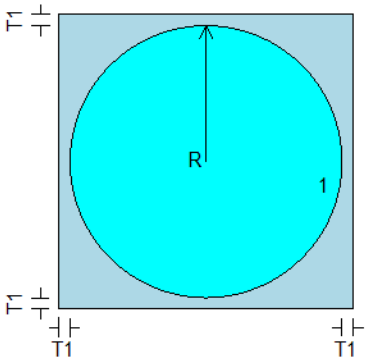


```
R > 0
```

SHAPE 62

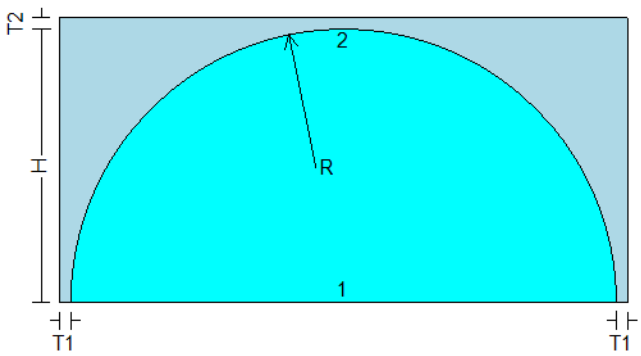


```
H > 0
R >= H
```

SHAPE 63

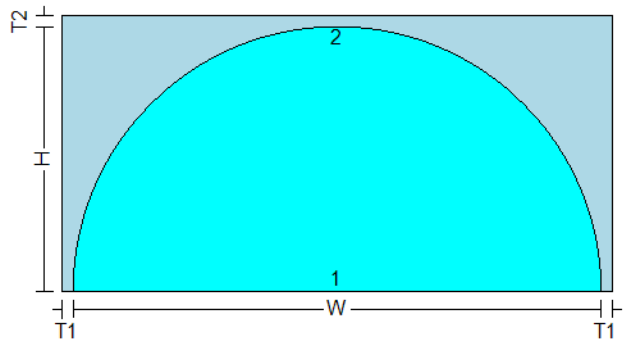


```
H <= W/2
W > 0
H > 0
```

SHAPE 64

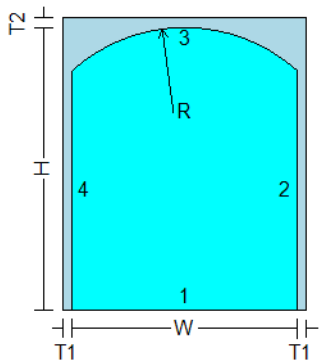


```
R >= W/2
H > R-SQRT(R^2-W^2/4)
0 < R-SQRT(R^2-W^2/4)
W > 0
H > 0
```

SHAPE 65

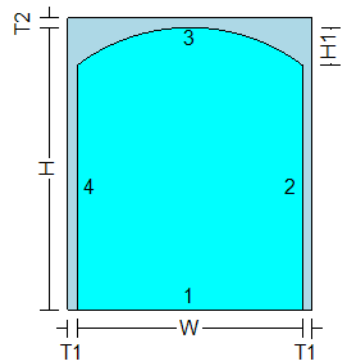


```
H1 <= W/2
H1 <= H
H1 > 0
W > 0
H > 0
```

SHAPE 66

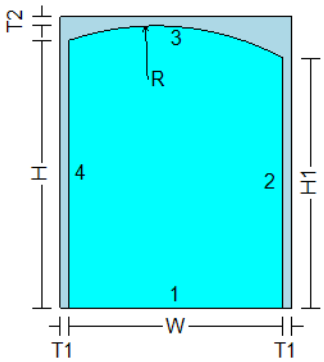


```
H1 <= H
R >= SQRT((H-H1)^2 + W^2)/2
H1 > 0
H > 0
W > 0
```

SHAPE 67

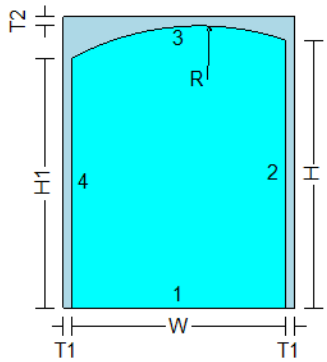


```
H1 <= H
R >= SQRT((H-H1)^2 + W^2)/2
H1 > 0
H > 0
W > 0
```

SHAPE 68

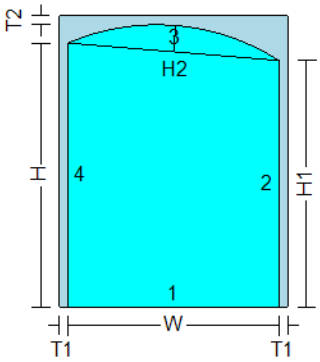


```
H1 <= H
H2 <= SQRT((H-H1)^2 + W^2)/2
H2 > 0
H1 > 0
W > 0
H > 0
```

SHAPE 69

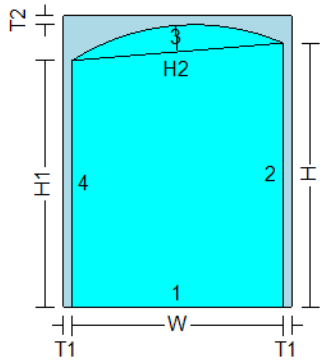


```
H1 <= H
H2 <= SQRT((H-H1)^2 + W^2)/2
H2 > 0
H1 > 0
W > 0
H > 0
```

SHAPE 70

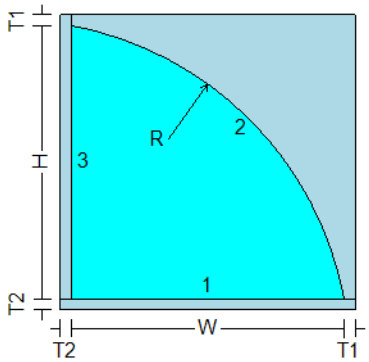


```
R >= SQRT(W^2 + H^2)/2
W > 0
H > 0
```

SHAPE 71

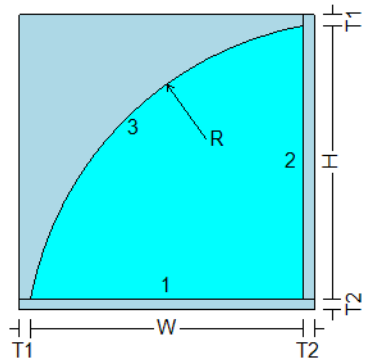


```
R >= SQRT(W^2 + H^2)/2
W > 0
H > 0
```

SHAPE 72

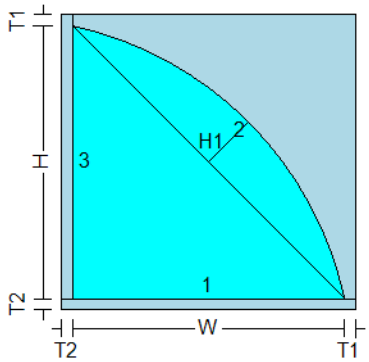


```
H1 <= SQRT(W^2 + H^2)
H1 > 0
W > 0
H > 0
```

SHAPE 73

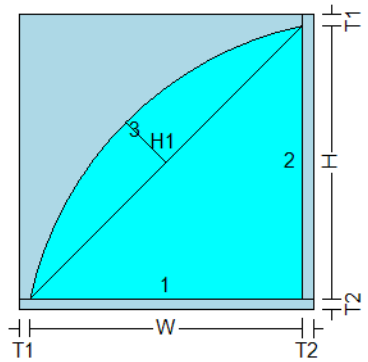


```
H1 <= SQRT(W^2 + H^2)
H1 > 0
W > 0
H > 0
```

SHAPE 74

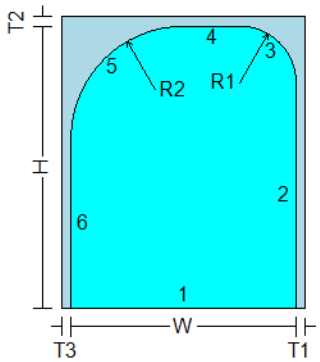


```
W >= R1 + R2
R1 > 0
R1 <= H
R2 > 0
R2 <= H
W > 0
H > 0
```

SHAPE 75

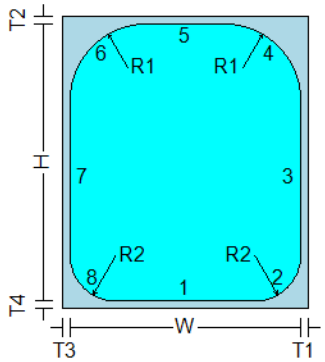


```
H >= R1 + R2
R1 > 0
R1 <= W/2
R2 > 0
R2 <= W/2
W > 0
H > 0
```

SHAPE 76

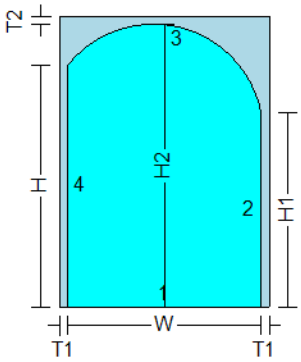


```
W > 0
H > 0
H1 > 0
H2 > 0
H >= H1
H2 > (H + H1)/2
```

SHAPE 77

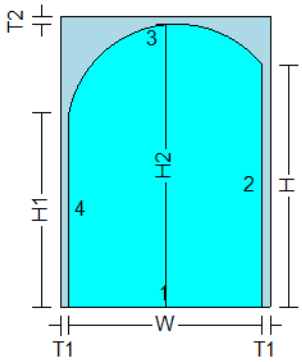


```
W > 0
H > 0
H1 > 0
H2 > 0
H >= H1
H2 > (H + H1)/2
```

SHAPE 78

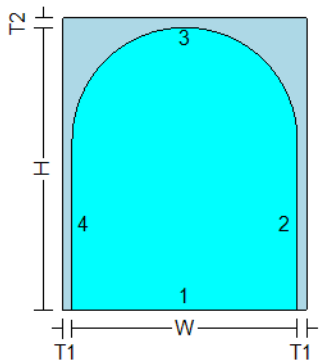


```
H >= W/2
W > 0
H > 0
```

SHAPE 81

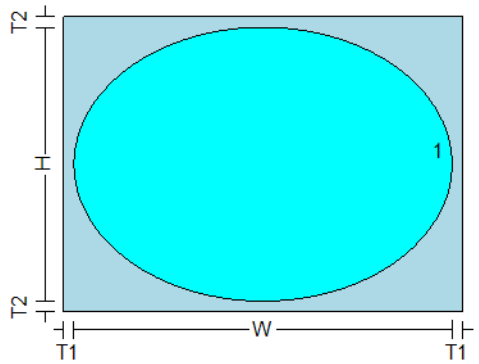


```
W > 0
H > 0
```

SHAPE 91

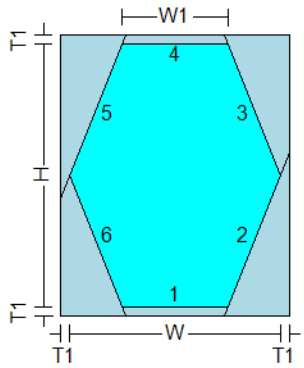


```
W1 > 0
W1 < W
W > 0
H > 0
```

SHAPE 92

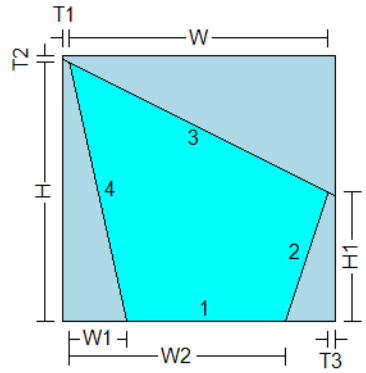


```
H1 > 0
W1 > 0
W2 > 0
H1 < H
W1 < W
W1 < W2
W2 < W
W > 0
H > 0
```

SHAPE 93

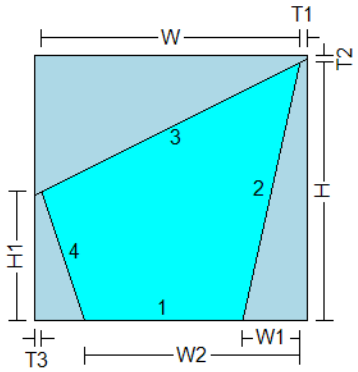


```
H1 > 0
W1 > 0
W2 > 0
H1 < H
W1 < W
W1 < W2
W2 < W
W > 0
H > 0
```

SHAPE 94

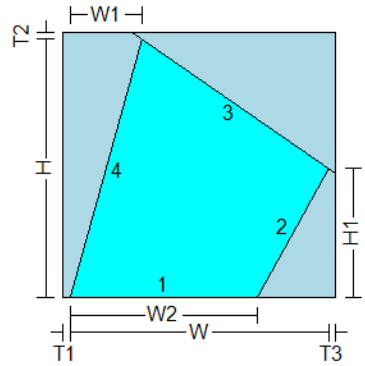


```
H1 > 0
W1 > 0
W2 > 0
H1 < H
W1 < W
W2 < W
W > 0
H > 0
```

SHAPE 95

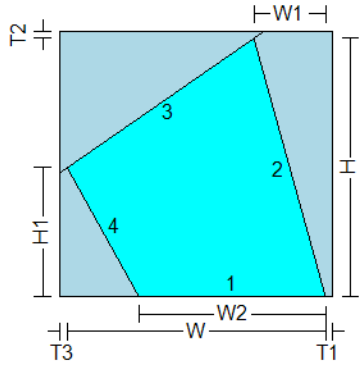


```
H1 > 0
W1 > 0
W2 > 0
H1 < H
W1 < W
W2 < W
W > 0
H > 0
```

SHAPE 96

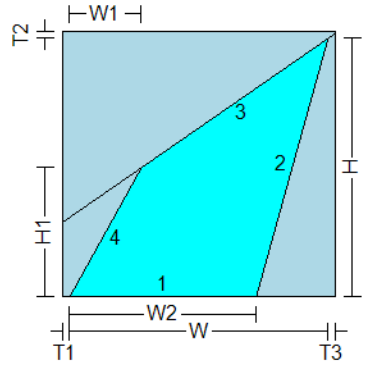


```
H1 > 0
W1 > 0
W2 > 0
H1 < H
W1 < W
W1 < W2
W2 < W
W > 0
H > 0
```

SHAPE 97

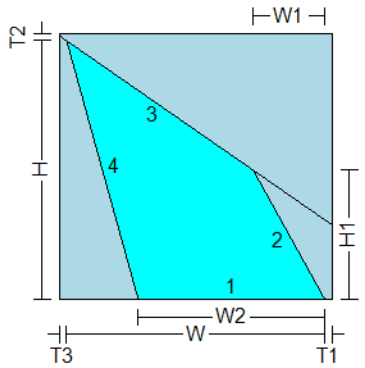


```
H1 > 0
W1 > 0
W2 > 0
H1 < H
W1 < W
W1 < W2
W2 < W
W > 0
H > 0
```

SHAPE 100

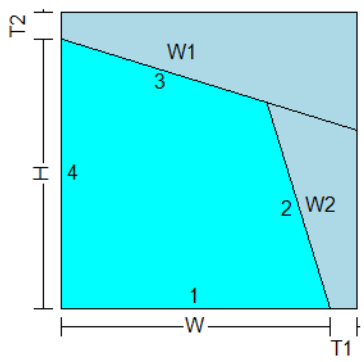


```
W > 0
H > 0
W1 + W2 > SQRT(W^2 + H^2)
W2 < SQRT(W^2 + H^2) + W1
W1 < SQRT(W^2 + H^2) + W2
```

SHAPE 101

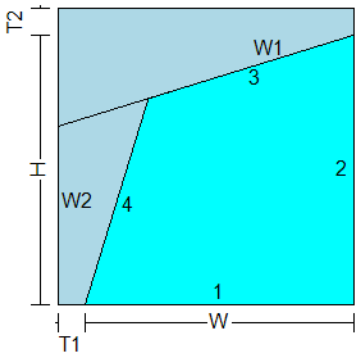


```
W > 0
H > 0
W1 + W2 > SQRT(W^2 + H^2)
W2 < SQRT(W^2 + H^2) + W1
W1 < SQRT(W^2 + H^2) + W2
```

SHAPE 103

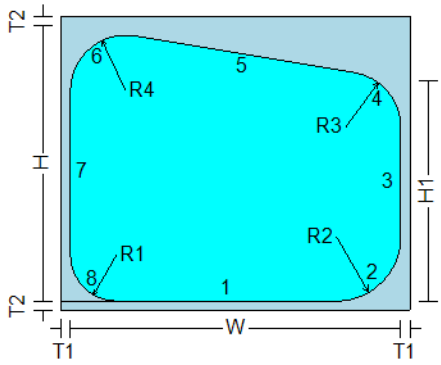


```
R1 > 0
R2 > 0
R3 > 0
R4 > 0
H >= R1 + R4
H1 >= R2 + R3
W >= R1 + R2
W >= R3 + R4
H1 <= H
W > 0
H > 0
```

SHAPE 113

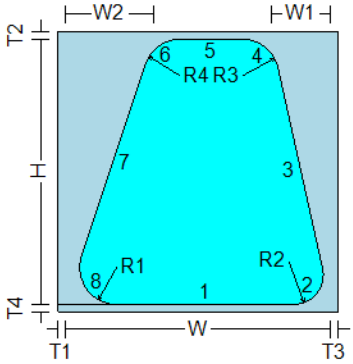


```
R1 > 0
R2 > 0
R3 > 0
R4 > 0
W1 >= 0
W2 >= 0
H >= R1 + R4
H >= R2 + R3
W >= R1 + R2
W >= R3 + R4
W > 0
H > 0
```

SHAPE 116

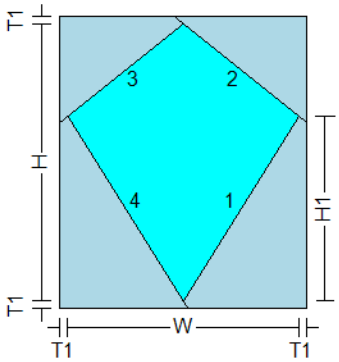


```
H1 > 0
H1 < H
W > 0
H > 0
```

SHAPE 117

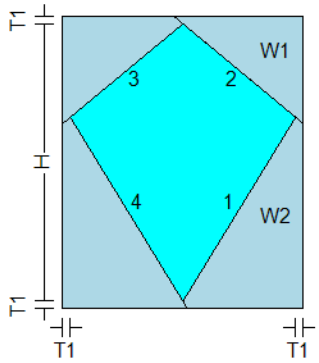


```
W1 > 0
W2 > 0
H > 0
H < W1 + W2
```

SHAPE 119

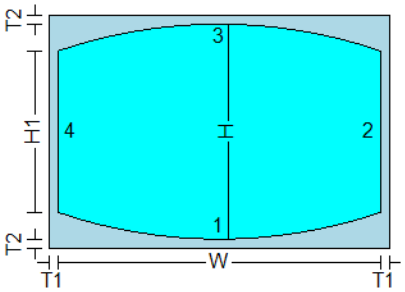


```
H1 > 0
H1 < H
H-H1 < SQRT(W^2+((H-H1)/2)^2)
W > 0
H > 0
```

SHAPE 129

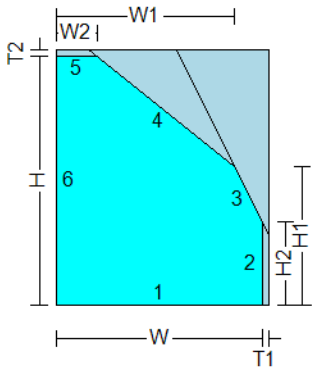


```
H1 > 0
W1 > 0
H1 < H
W1 < W
W2 < W
W2 > 0
W1 > W2
W > 0
H > 0
```

SHAPE 130

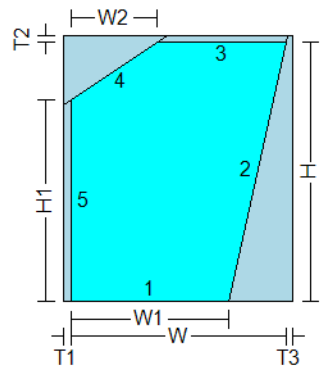


```
H1 > 0
W1 > 0
H1 < H
W1 < W
W2 < W
W2 > 0
W > 0
H > 0
```

SHAPE 131

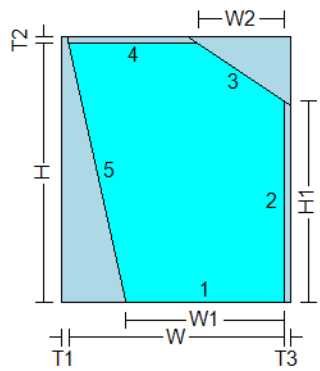


```
H1 > 0
W1 > 0
H1 < H
W1 < W
W2 < W
W2 > 0
W > 0
H > 0
```

SHAPE 132

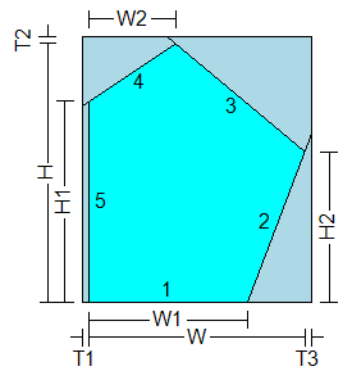


```
H1 > 0
H2 > 0
W1 > 0
H1 < H
H2 < H
W1 < W
W2 < W
W2 > 0
W > 0
H > 0
```

SHAPE 133

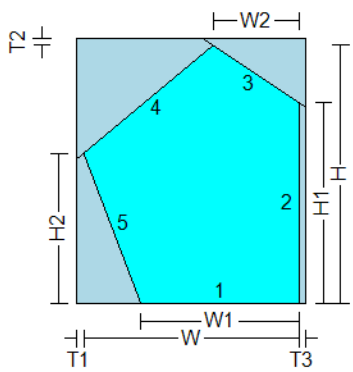


```
H1 > 0
H2 > 0
W1 > 0
H1 < H
H2 < H
W1 < W
W2 < W
W2 > 0
W > 0
H > 0
```

SHAPE 134

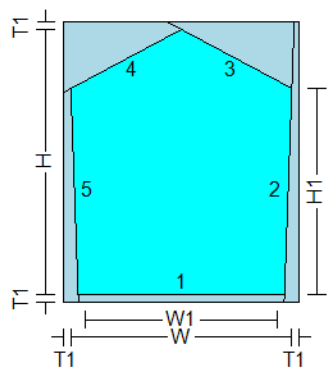


```
H1 > 0
W1 > 0
H1 < H
W1 < W
W1 > W/2
W > 0
H > 0
```

SHAPE 135

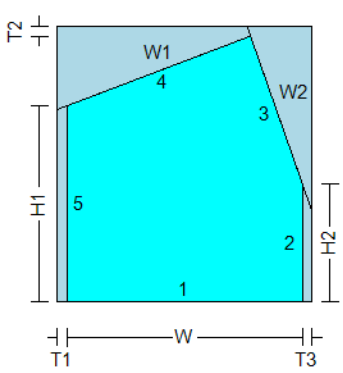


```
W > 0
H1 > 0
H2 > 0
W1 + W2 > SQRT(W^2 + (H1 - H2)^2)
W2 < SQRT(W^2 + (H1 - H2)^2) + W1
W1 < SQRT(W^2 + (H1 - H2)^2) + W2
```

SHAPE 142

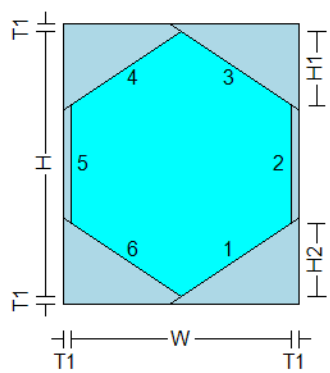


```
H1 > 0
H2 > 0
H1 < H/2
H2 < H/2
W > 0
H > 0
```

SHAPE 144

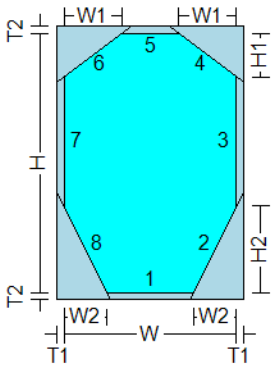


```
H1 > 0
H1 < H/2
H2 > 0
H2 < H/2
W1 > 0
W1 < W/2
W2 > 0
W2 < W/2
W > 0
H > 0
```

SHAPE 152

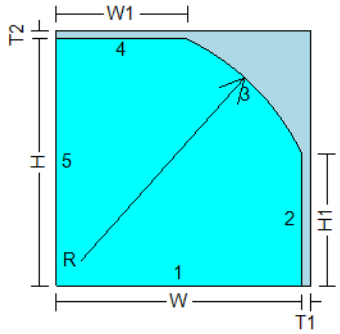


```
H > 0
W > 0
W1 > 0
W > W1
H1 > 0
H > H1
R >= 0
R*2 >= SQRT((W - W1)^2 + (H-H1)^2)
```

SHAPE 153

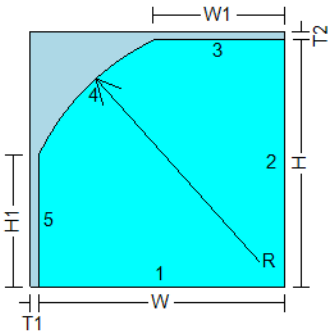


```
H > 0
W > 0
W1 > 0
W > W1
H1 > 0
H > H1
R >= 0
R*2 >= SQRT((W - W1)^2 + (H-H1)^2)
```

SHAPE 154

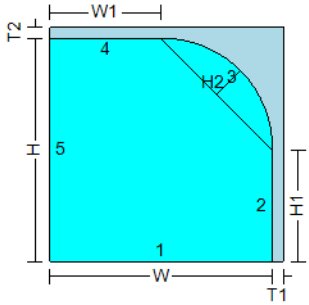


```
W > W1
W1 >= 0
H > H1
H1 >= 0
H2 > 0
H2*2 <= SQRT((W - W1)^2 + (H - H1)^2)
```

SHAPE 155

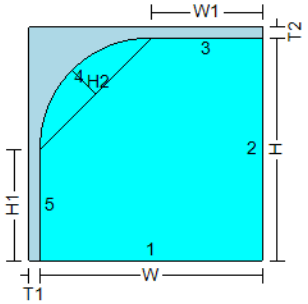


```
W > W1
W1 >= 0
H > H1
H1 >= 0
H2 > 0
H2*2 <= SQRT((W - W1)^2 + (H - H1)^2)
```

SHAPE 156

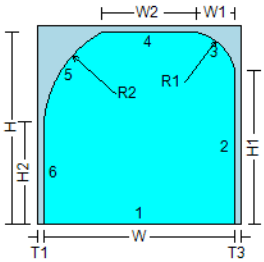


```
W > 0
H > 0
W > W1 + W2
W1 > 0
W2 > 0
H > H1
H1 > 0
H1 > H2
H2 > 0
R1 >= 0
R2 >= 0
R1 * 2 >= SQRT(W1^2 + (H-H1)^2)
R2 * 2 >= SQRT((W-W1-W2)^2 + (H - H2)^2)
```

SHAPE 157

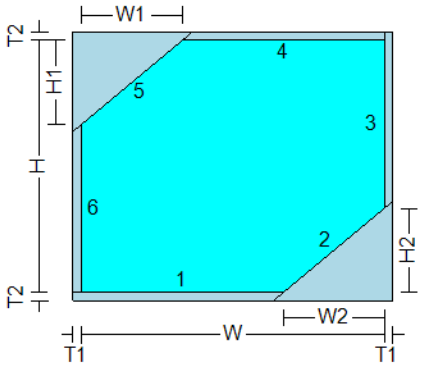


```
H1 < H
H2 < H
H1 > 0
H2 > 0
W1 > 0
W1 < W
W2 > 0
W2 < W
W > 0
H > 0
```

SHAPE 160

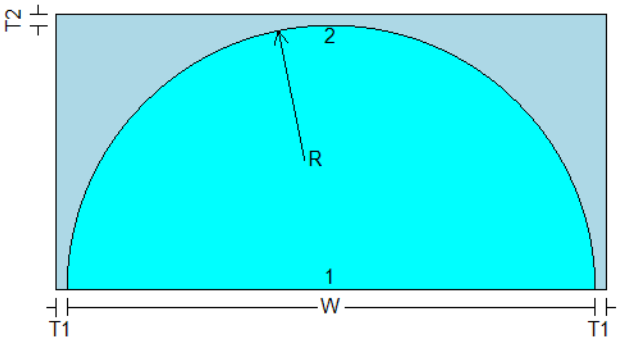


```
W > 0
R >= W/2
```

SHAPE 162

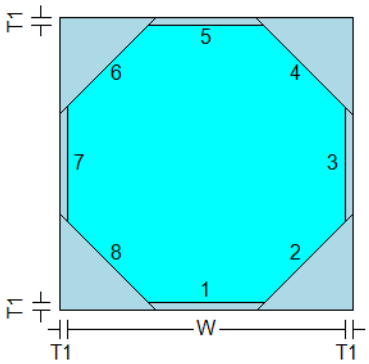


```
W > 0
```

SHAPE 169

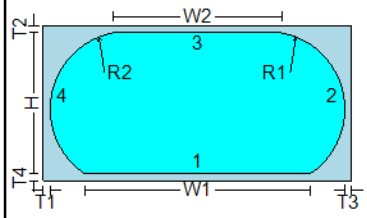


```
W1 >= 0
W2 >= 0
H > 0
R1 >= SQRT(((W1-W2)/2)^2 + H^2) / 2
R2 >= SQRT(((W1-W2)/2)^2 + H^2) / 2
```

SHAPE 170

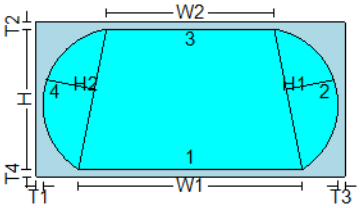


```
W1 >= 0
W2 >= 0
H > 0
H1 <= SQRT(((W1-W2)/2)^2 + H^2) / 2
H2 <= SQRT(((W1-W2)/2)^2 + H^2) / 2
```

SHAPE 215

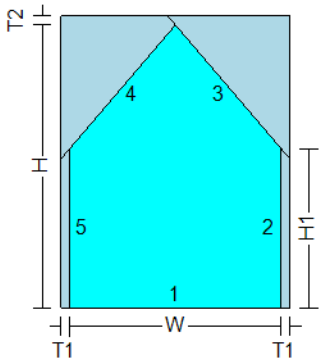


```
H1 > 0
H1 < H
W > 0
H > 0
```

SHAPE 238

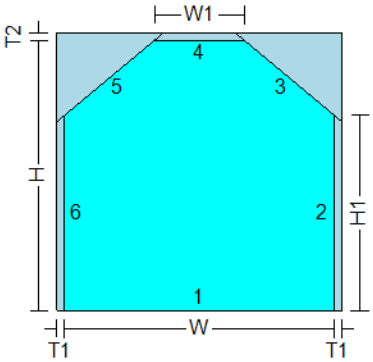


```
H1 > 0
H1 < H
W1 > 0
W1 < W
W > 0
H > 0
```

SHAPE 254

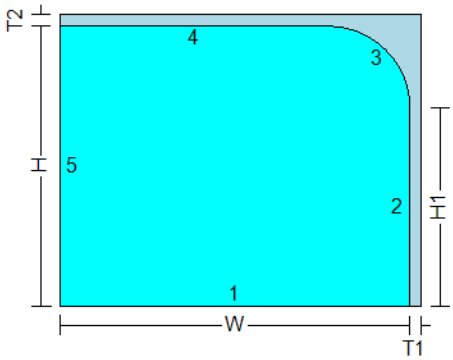


```
H1 > 0
H1 < H
W >= H - H1
W > 0
H > 0
```

SHAPE 255

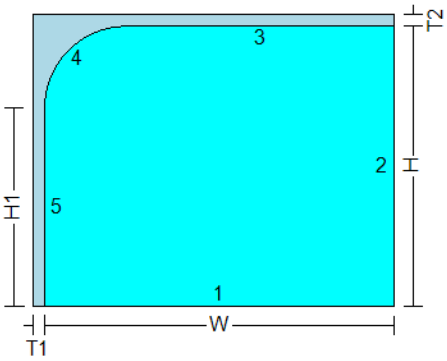


```
H1 > 0
H1 < H
W >= H - H1
W > 0
H > 0
```

SHAPE 261

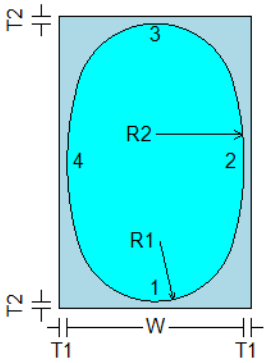


```
R1 > 0
R2 > 0
R1 < W/2
R2 > W/2
W > 0
H > 0
```

SHAPE 262

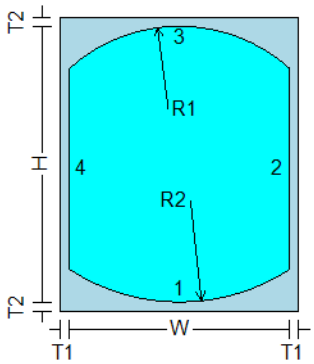


```
R1 > W/2
R2 > W/2
W > 0
H > 0
```

SHAPE 272

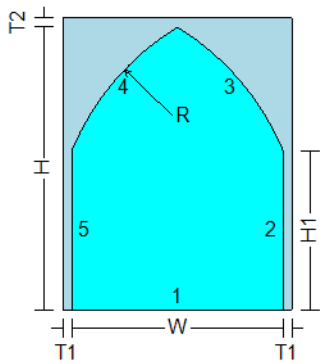


```
H1 > 0
H1 < H
R > W/2
R >= ((W^2)/(8*(H-H1)))+(H-H1)/2
W > 0
H > 0
```

SHAPE 277

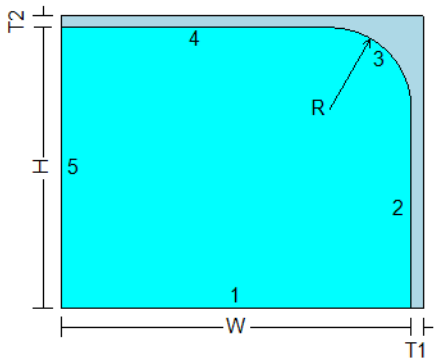


```
R > 0
R < H
R < W
W > 0
H > 0
```

SHAPE 278

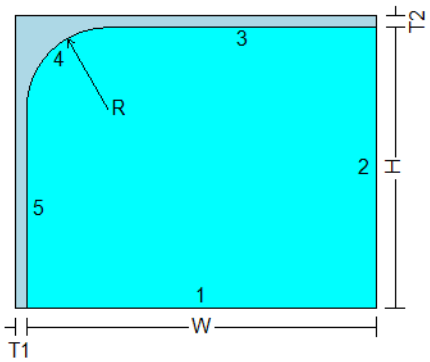


```
R > 0
R < H
R < W
W > 0
H > 0
```

SHAPE 301

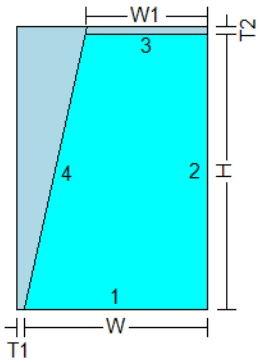


```
W1 > 0
W1 < W
W > 0
H > 0
```

SHAPE 302

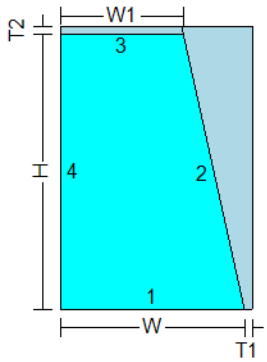


```
W1 > 0
W1 < W
W > 0
H > 0
```

SHAPE 303

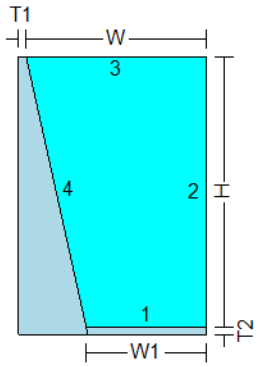


```
W1 > 0
W1 < W
W > 0
H > 0
```

SHAPE 304

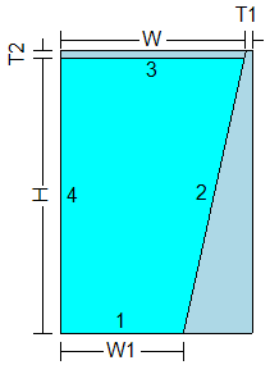


```
W1 > 0
W1 < W
W > 0
H > 0
```

SHAPE 305

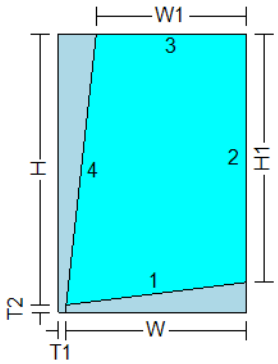


```
W1 > 0
H1 > 0
W1 < W
H1 < H
W > 0
H > 0
```

SHAPE 306

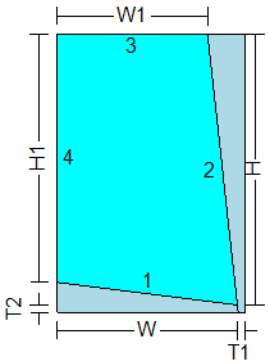


```
W1 > 0
H1 > 0
W1 < W
H1 < H
W > 0
H > 0
```

SHAPE 307

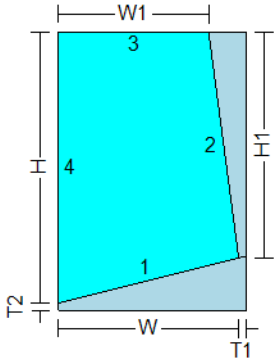


```
W1 > 0
H1 > 0
W1 < W
H1 < H
W > 0
H > 0
```

SHAPE 308

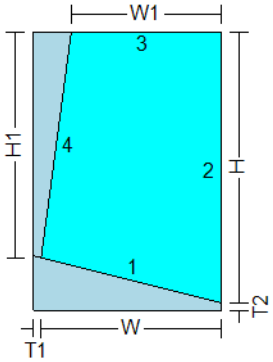


```
W1 > 0
H1 > 0
W1 < W
H1 < H
W > 0
H > 0
```

SHAPE 309

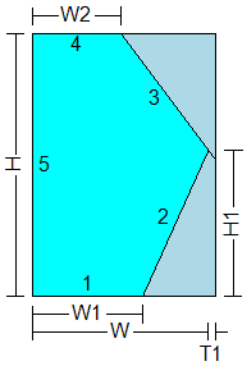


```
H1 > 0
H1 < H
W1 > 0
W1 < W
W2 > 0
W2 < W
W > 0
H > 0
```

SHAPE 310

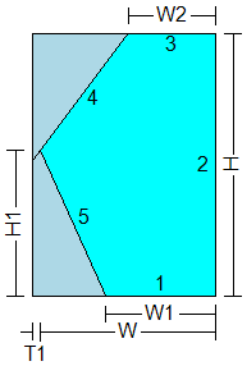


```
H1 > 0
H1 < H
W1 > 0
W1 < W
W2 > 0
W2 < W
W > 0
H > 0
```

SHAPE 311

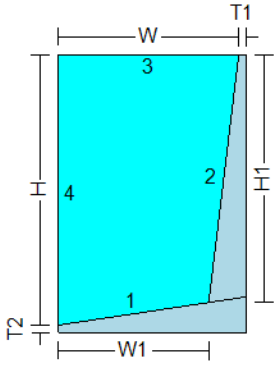


```
W1 > 0
H1 > 0
W1 < W
H1 < H
W > 0
H > 0
```

SHAPE 312

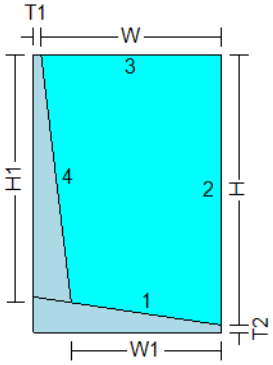


```
W1 > 0
H1 > 0
W1 < W
H1 < H
W > 0
H > 0
```

SHAPE 313

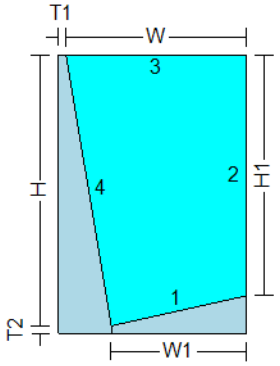


```
W1 > 0
H1 > 0
W1 < W
H1 < H
W > 0
H > 0
```

SHAPE 314

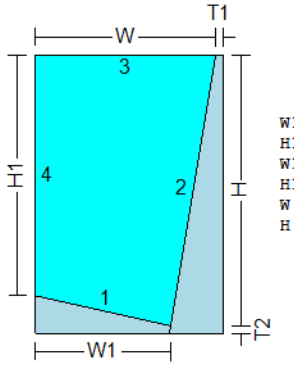


```
W1 > 0
H1 > 0
W1 < W
H1 < H
W > 0
H > 0
```

SHAPE 315

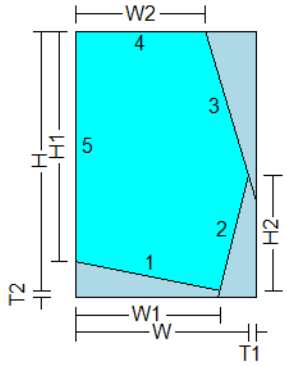


```
H1 > 0
H1 < H
H2 > 0
H2 < H
W1 > 0
W1 < W
W2 > 0
W2 < W
W > 0
H > 0
```

SHAPE 316

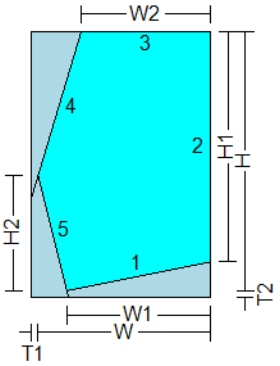


```
H1 > 0
H1 < H
H2 > 0
H2 < H
W1 > 0
W1 < W
W2 > 0
W2 < W
W > 0
H > 0
```

SHAPE 317

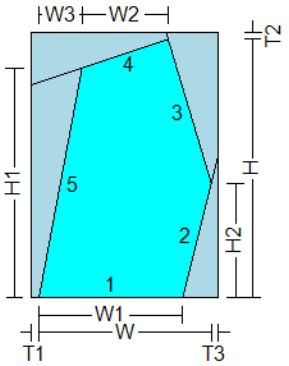


```
H1 > 0
H1 < H
H2 > 0
H2 < H
W1 > 0
W1 < W
W2 > 0
W3 > 0
W > W2 + W3
W > 0
H > 0
```

SHAPE 318

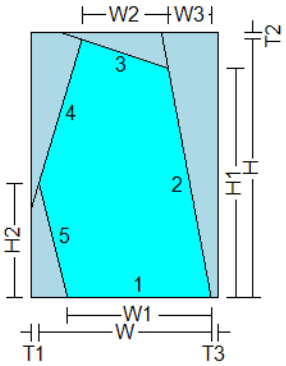


```
H1 > 0
H1 < H
H2 > 0
H2 < H
W1 > 0
W1 < W
W2 > 0
W3 > 0
W > W2 + W3
W > 0
H > 0
```

SHAPE 319

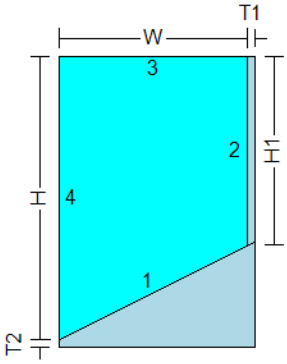


```
H1 < H
H1 > 0
W > 0
H > 0
```

SHAPE 320

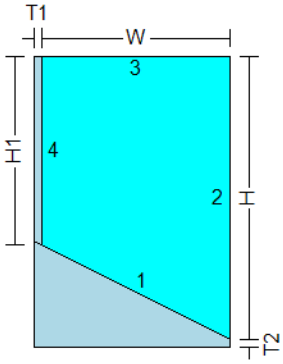


```
H1 < H
H1 > 0
W > 0
H > 0
```

SHAPE 321

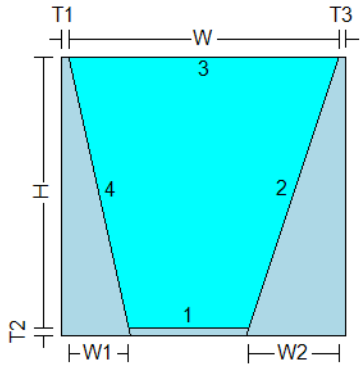


```
W1 > 0
W2 > 0
W > W1 + W2
W > 0
H > 0
```

SHAPE 322

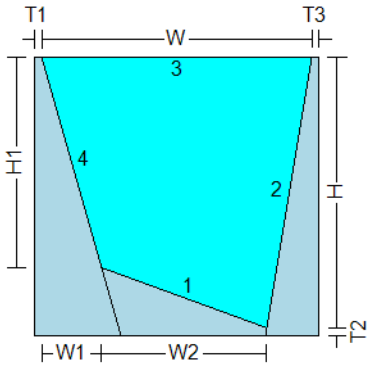


```
H1 > 0
W1 > 0
W2 > 0
H1 < H
W > W1 + W2
W > 0
H > 0
```

SHAPE 323

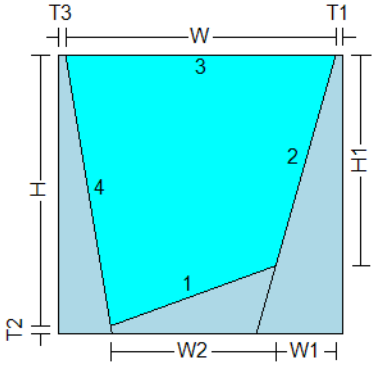


```
H1 > 0
W1 > 0
W2 > 0
H1 < H
W > W1 + W2
W > 0
H > 0
```

SHAPE 324

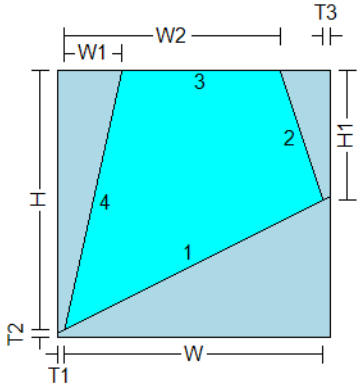


```
H1 > 0
W1 > 0
W2 > 0
H1 < H
W1 < W
W1 < W2
W2 < W
W > 0
H > 0
```

SHAPE 325

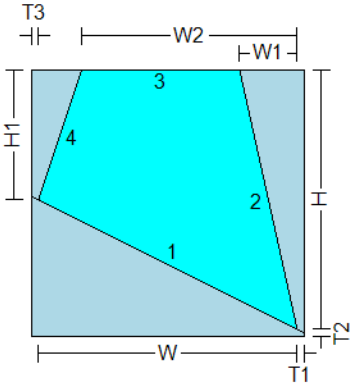


```
H1 > 0
W1 > 0
W2 > 0
H1 < H
W1 < W
W1 < W2
W2 < W
W > 0
H > 0
```

SHAPE 326

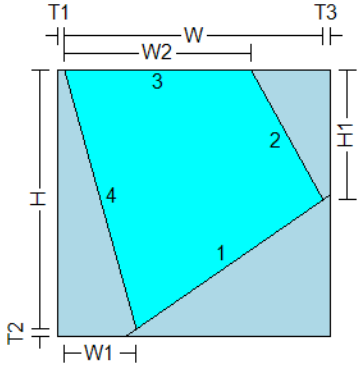


```
H1 > 0
W1 > 0
W2 > 0
H1 < H
W1 < W
W1 < W2
W2 < W
W > 0
H > 0
```

SHAPE 327

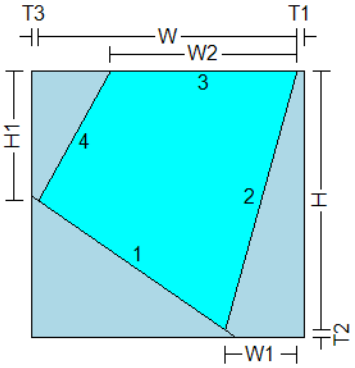


```
H1 > 0
W1 > 0
W2 > 0
H1 < H
W1 < W
W1 < W2
W2 < W
W > 0
H > 0
```

SHAPE 328

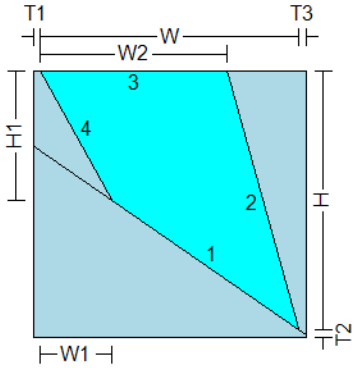


```
H1 > 0
W1 > 0
W2 > 0
H1 < H
W1 < W
W1 < W2
W2 < W
W > 0
H > 0
```

SHAPE 329

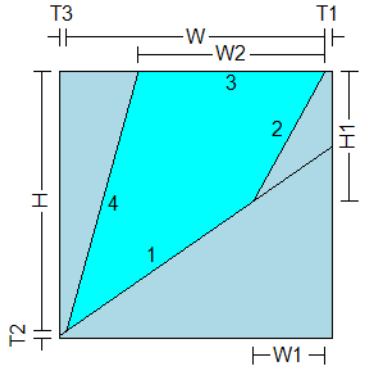


```
H1 > 0
W1 > 0
W2 > 0
H1 < H
W1 < W
W1 < W2
W2 < W
W > 0
H > 0
```

SHAPE 330

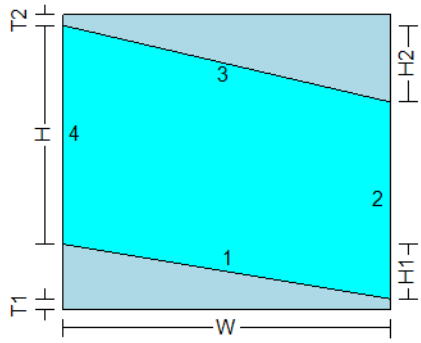


```
H1 >= 0
H2 >= 0
H2 < H + H1
W > 0
H > 0
```

SHAPE 331

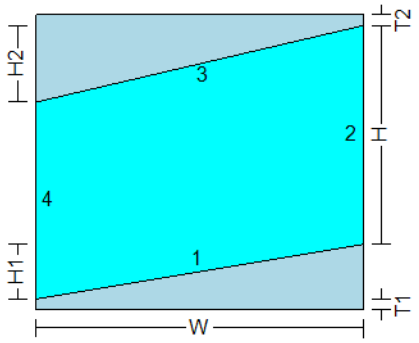


```
H1 >= 0
H2 >= 0
H2 < H + H1
H > 0
```

SHAPE 332

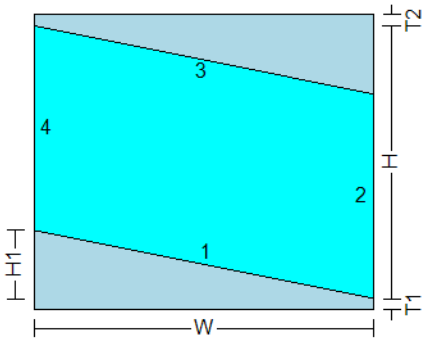


```
H1 >= 0
H1 < H
W > 0
H > 0
```

SHAPE 333

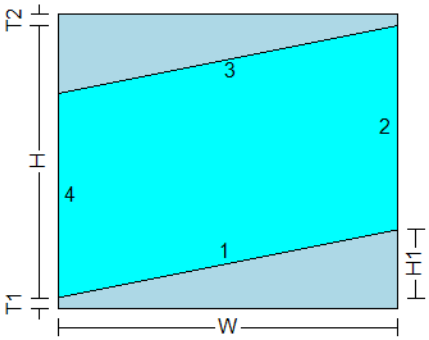


```
H1 >= 0
H1 < H
W > 0
H > 0
```

SHAPE 334

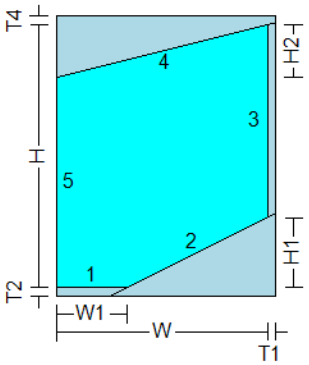


```
W1 < W
W1 > 0
H1 < H
H2 < H
H1 > 0
H2 > 0
W > 0
H > 0
```

SHAPE 335

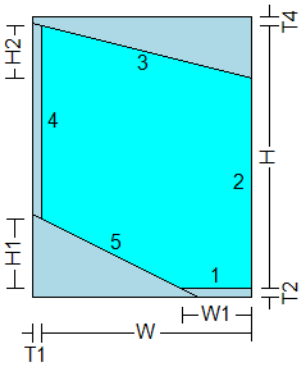


```
W1 < W
W1 > 0
H1 < H
H2 < H
H1 > 0
H2 > 0
W > 0
H > 0
```

SHAPE 336

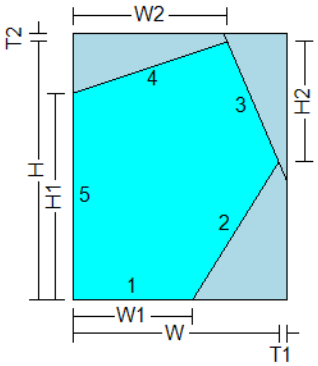


```
W1 < W
W2 < W
W1 > 0
W2 > 0
H1 < H
H2 < H
H1 > 0
H2 > 0
W > 0
H > 0
```

SHAPE 337

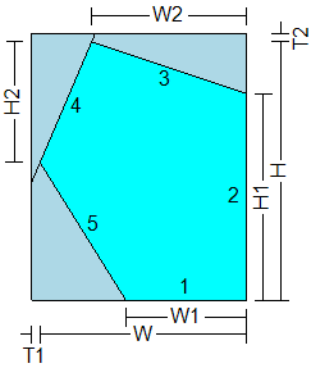


```
W1 < W
W2 < W
W1 > 0
W2 > 0
H1 < H
H2 < H
H1 > 0
H2 > 0
W > 0
H > 0
```

SHAPE 338

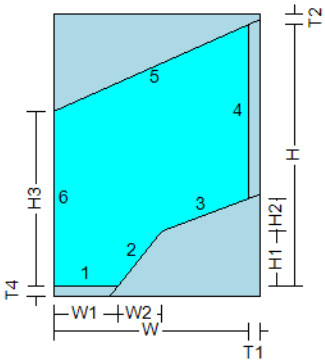


```
H1 > 0
H2 > 0
H3 > 0
W1 > 0
W2 > 0
H3 < H
H1 + H2 < H
W1 + W2 < W
H1 < (((H - H3) / W)*(W1 + W2)) + H3
W > 0
H > 0
```

SHAPE 339

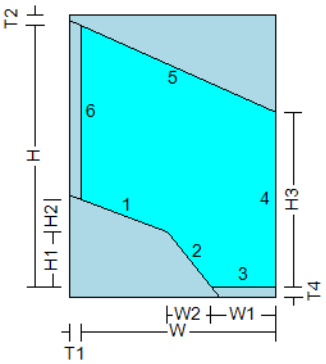


```
H1 > 0
H2 > 0
H3 > 0
W1 > 0
W2 > 0
H3 < H
H1 + H2 < H
W1 + W2 < W
H1 < (((H - H3) / W)*(W1 + W2)) + H3
W > 0
H > 0
```

SHAPE 340

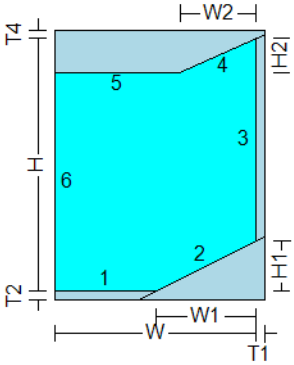


```
W1 < W
W2 < W
W1 > 0
W2 > 0
H1 < H
H2 < H
H1 > 0
H2 > 0
H-H2 > (H1/W1) * (W1-W2)
W > 0
H > 0
```

SHAPE 341

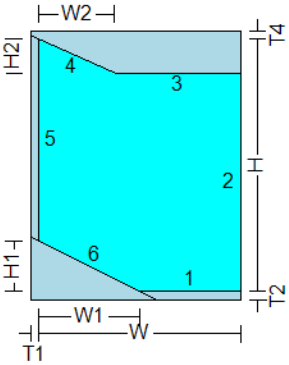


```
W1 < W
W2 < W
W1 > 0
W2 > 0
H1 < H
H2 < H
H1 > 0
H2 > 0
H-H2 > (H1/W1) * (W1-W2)
W > 0
H > 0
```

SHAPE 342

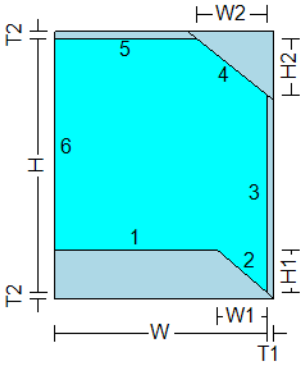


```
W1 > 0
W1 < W
W2 > 0
W2 < W
H1 > 0
H1 < H
H2 > 0
H2 < H
H1 < ((H2 / W2) * W1) + (H-H2)
W > 0
H > 0
```

SHAPE 343

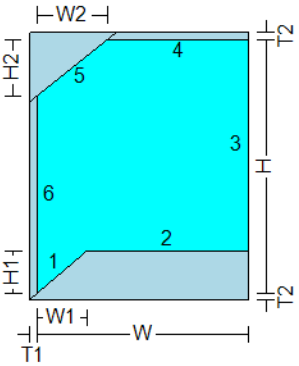


```
W1 > 0
W1 < W
W2 > 0
W2 < W
H1 > 0
H1 < H
H2 > 0
H2 < H
H1 < ((H2 / W2) * W1) + (H-H2)
W > 0
H > 0
```

SHAPE 344

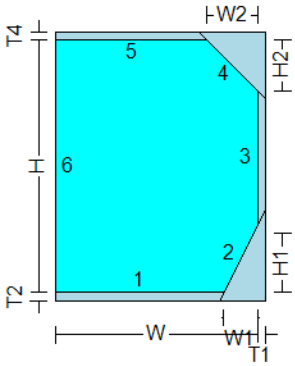


```
W1 < W
W2 < W
W1 > 0
W2 > 0
H1 < H
H2 < H
H1 > 0
H2 > 0
H > H1 + H2
W > 0
H > 0
```

SHAPE 345

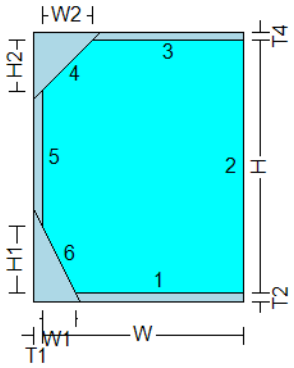


```
W1 < W
W2 < W
W1 > 0
W2 > 0
H1 < H
H2 < H
H1 > 0
H2 > 0
H > H1 + H2
W > 0
H > 0
```

SHAPE 401

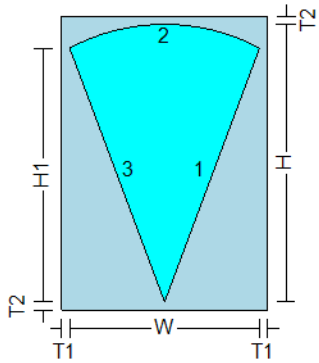


```
H1 > 0
H1 < H
H - H1 <= W / 2
W > 0
H > 0
```

SHAPE 402

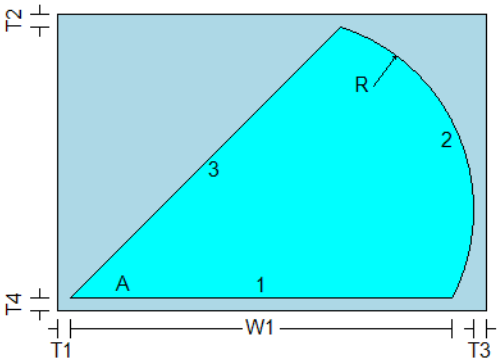


```
W1 > 0
R >= W1*Sin(A/2)
A > 0
A < 90
```

SHAPE 403

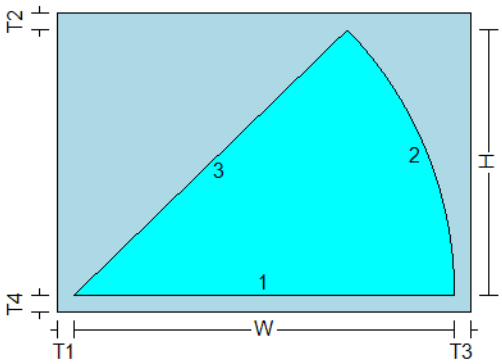


```
W >= H
W > 0
H > 0
```

SHAPE 404

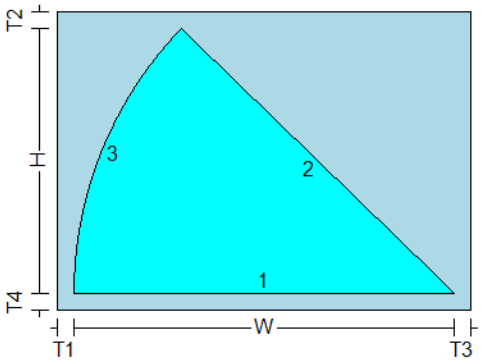


```
W >= H
W > 0
H > 0
```

SHAPE 405

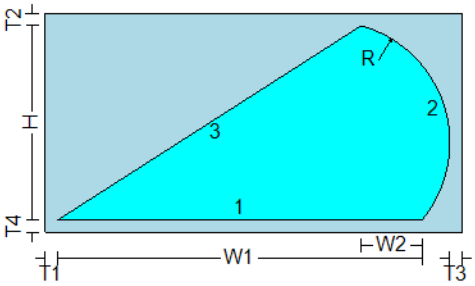


```
W1 > 0
W1 >= 0
R*2 >= SQRT(W2^2 + H^2)
W > 0
H > 0
```

SHAPE 406

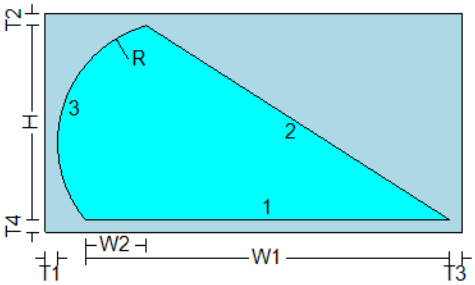


```
W1 > 0
W1 >= 0
R*2 >= SQRT(W2^2 + H^2)
W > 0
H > 0
```

SHAPE 500

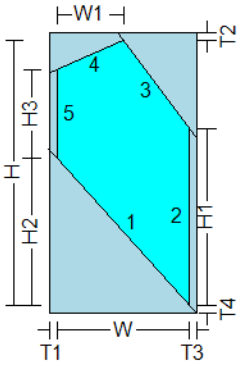


```
H1 > 0
H1 < H
H2 > 0
H3 > 0
H2+H3 < H
W1 > 0
W1 < W
W > 0
H > 0
```

SHAPE 501

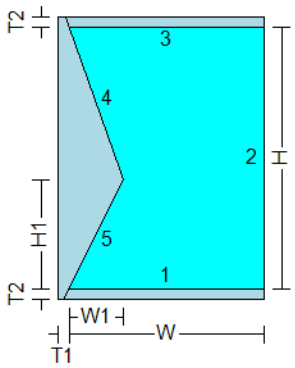


```
H1 > 0
H1 < H
W1 > 0
W1 < W
W > 0
H > 0
```

SHAPE 502

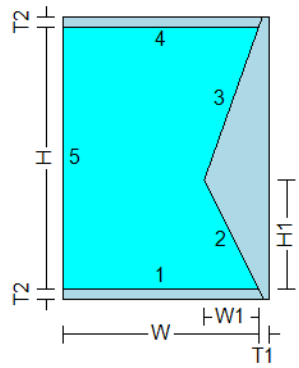


```
H1 > 0
H1 < H
W1 > 0
W1 < W
W > 0
H > 0
```

SHAPE 503

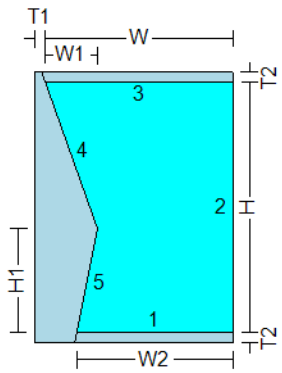


```
H1 > 0
H1 < H
W1 > 0
W1 < W
W2 > 0
W2 <= W
W > 0
H > 0
```

SHAPE 504

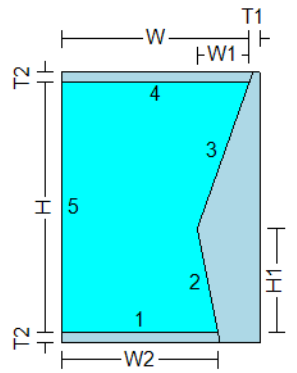


```
H1 > 0
H1 < H
W1 > 0
W1 < W
W2 > 0
W2 <= W
W > 0
H > 0
```

SHAPE 505

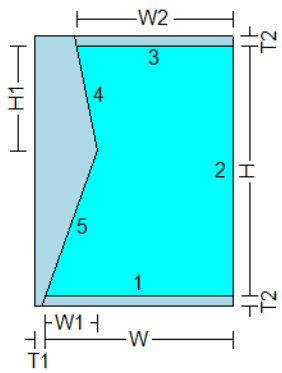


```
H1 > 0
H1 < H
W1 > 0
W1 < W
W2 > 0
W2 <= W
W > 0
H > 0
```

SHAPE 506

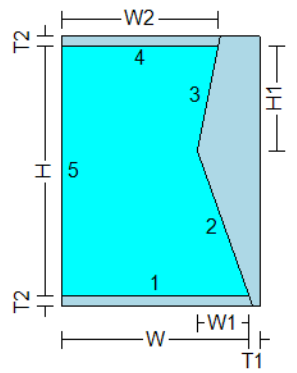


```
H1 > 0
H1 < H
W1 > 0
W1 < W
W2 > 0
W2 <= W
W > 0
H > 0
```

SHAPE 811

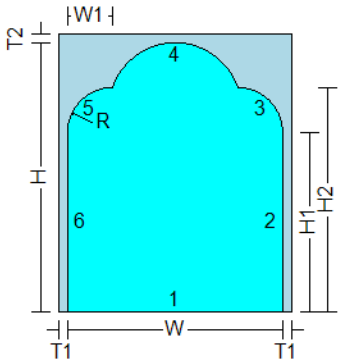


```
H1 >= 0
H2 > H1
H2 < H
R >= H2-H1
R >= SQRT(W1^2+(H2-H1)^2)/2
W1 <= R*2
W > 2*(H-H2)
W > 0
H > 0
```

SHAPE 901

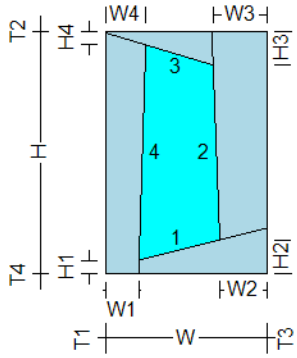


```
W > 0
H > 0
H1 >= 0
H2 >= 0
H3 >= 0
H4 >= 0
W1 >= 0
W2 >= 0
W3 >= 0
W4 >= 0
W1 + W2 < W
W3 + W4 < W
H1 + H4 < H
H2 + H3 < H
(W1 = 0 || W4 = 0)
(W2 = 0 || W3 = 0)
(H1 = 0 || H2 = 0)
(H3 = 0 || H4 = 0)
```

SHAPE 902

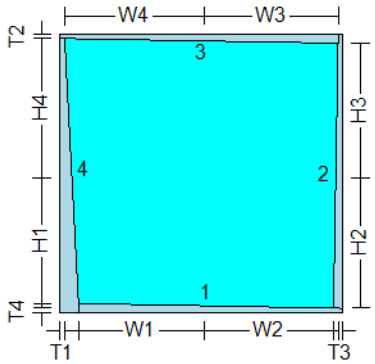

H1 > 0
H2 > 0
H3 > 0
H4 > 0
W1 > 0
W2 > 0
W3 > 0
W4 > 0

DXF - EDGEWORK SHAPE 997

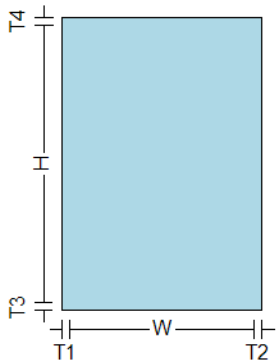

W > 0
H > 0

TEMPLATE SHAPE 998

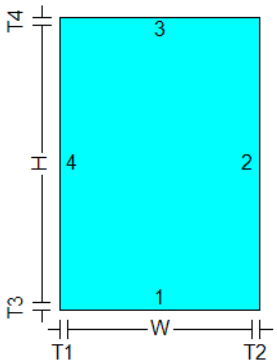

W > 0
H > 0

DXF SHAPE 999

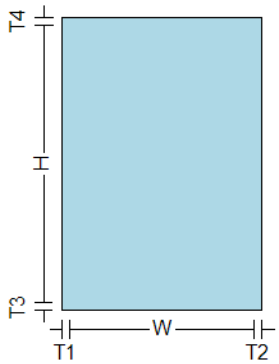

W > 0
H > 0